aimshop
• LAP TIMERS • LOGGERS • CAMERAS • DASHES • SENSORS • AND MORE
SHOP NOW

AiM User Guide

Kit EVO4S, SOLO 2/ SOLO 2 DL for Aprilia RSV4 (MY 2017-2019)

Release 1.02

KIT

VISIT SUPPORT CENTER | SOFTWARE DOWNLOADS | FIRMWARE UPDATES | PRODUCT DOCUMENTATION

1
Models and years

This manual explains how to connect EVO4S and SOLO 2 DL to the bike engine control unit (ECU).

Compatible models are:

- Aprilia RSV4 RR/RF 2017 -2018
- Aprilia RSV4 1100 2019 -2020
- Aprilia Tuono V4 RR/Factory 2017-2020

Warning: for these models/years AiM recommends not to remove the stock dash. Doing so will disable some of the bike functions or safety controls. AiM Tech srl will not be held responsible for any consequences that may result from the replacement of the original instrumentation cluster.

2
Kit content and part numbers

AiM developed a specific installation bracket for SOLO 2/SOLO 2 DL and a connection cable to the ECU for EVO4S/SOLO 2 DL.

2.1
Bracket for SOLO 2/SOLO 2 DL

Part number for **SOLO 2/SOLO 2 DL** installation bracket for **Aprilia RSV4** – shown below – is: **X46KSARSV40.**

Installation kit contains:

- 1 bracket (**1**)
- 1 allen screw with rounded head M8x45mm (**2**)
- 2 allen screws with flat head M4x10mm (**3**)
- 1 toothed washer (**4**)
- 1 rubber dowel (**5**)

2.2
AiM cable for EVO4S/SOLO 2 DL

Part number for **EVO4S/SOLO 2 DL** connection cable for **Aprilia RSV4** – shown below – is: **V02589090**.

Following image shows the cable constructive scheme:

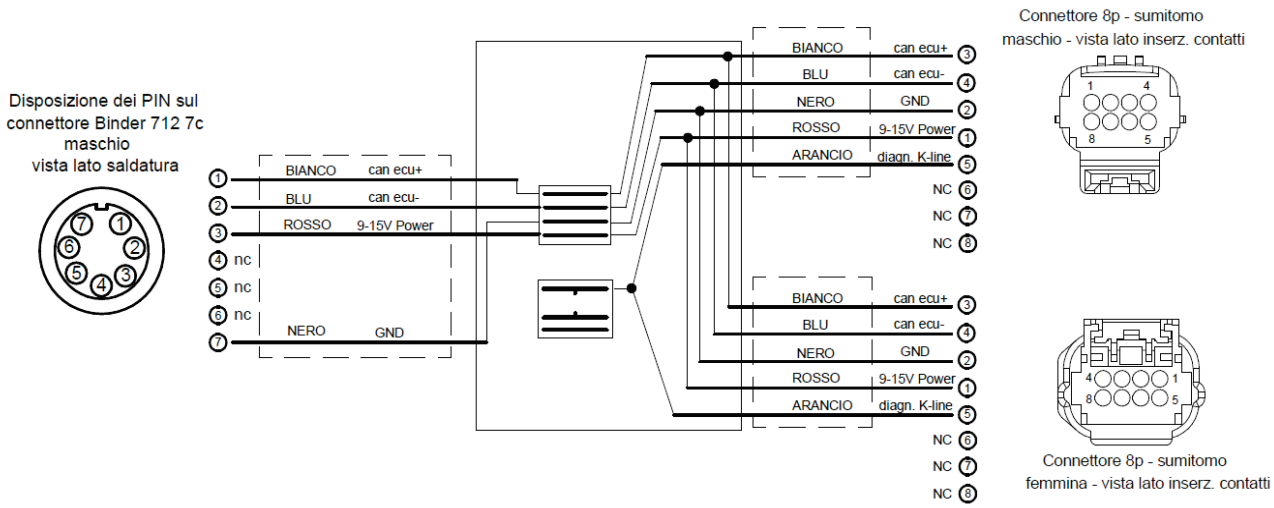

Installation bracket and connection cable for SOLO 2 DL for Aprilia RSV4 can be bought together. Part number: **V0258909CS.**

3
EVO4S/SOLO 2 DL connection

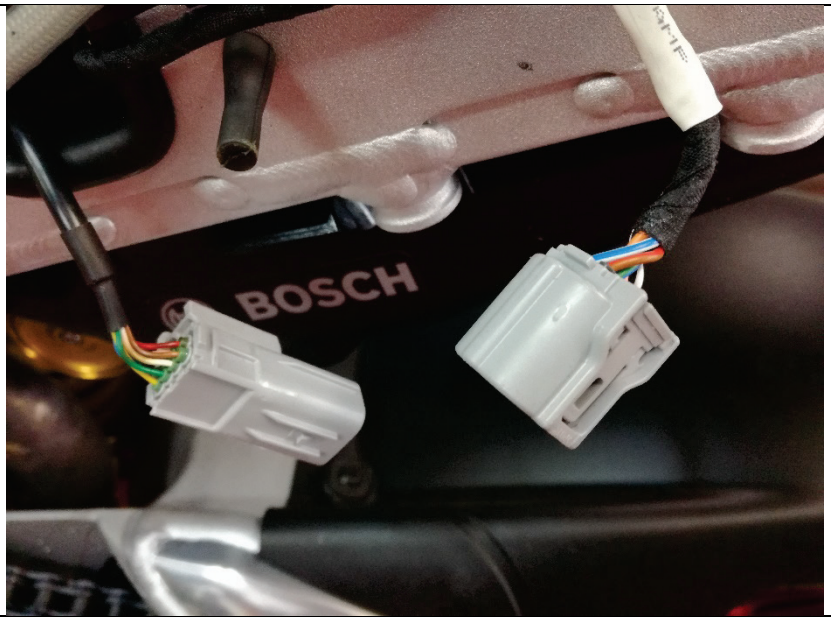

Aprilia RSV4 communication line is based on CAN protocol that can be reached through the dedicated connector for V4-MP module connection, placed on the bike left side.

4
Configuration with Race Studio 3

Before connecting EVO4S/SOLO 2 DL to the bike ECU, set all functions using the AiM software Race Studio 3. The parameters to set in the AiM device configuration section are ("ECU Stream" tab):

- ECU Manufacturer: **APRILIA**
- ECU Model: **RSV4_APRC_V4MP** (RS3 only)

After this first selection, enable/disable the 120Ohm resistor and the "Silent" mode on CAN Bus as follows, according to the used device:

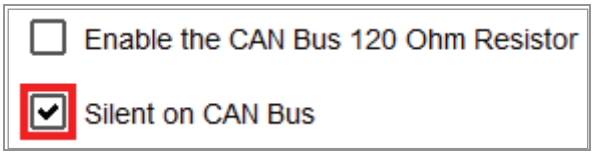

5
"APRILIA – RSV4_APRC_V4MP" protocol

Received channels by EVO4S/SOLO 2 DL configured with "APRILIA – RSV4_APRC_V4MP" protocol are:

CHANNEL NAME	FUNCTION
RSV4 RPM	RPM
RSV4 GEAR	Active gear
RSV4 BK SPEED	Vehicle speed
RSV4 WH SPD F	Front wheel speed
RSV4 WH SPD R	Rear wheel speed Warning led
RSV4 ACC LONG	Longitudinal acceleration
RSV4 ACC LAT	Lateral acceleration
RSV4 ROLL RATE	Roll rate
RSV4 YAW RATE	Yaw rate Low fuel level

RSV4 ENG TEMP	Engine coolant temperature
RSV4 Brake press	Brake pressure
RSV4 Baro	Barometric pressure
RSV4 MAP2 Target	Manifold air pressure 2 target
RSV4 MAP1 Target	Manifold air pressure 1 target
RSV4 MAP2	Manifold air pressure 2
RSV4 MAP1	Manifold air pressure 1
RSV4 Advance	Ignition advance
V4MP Lean angle	Lean angle
RSV4 Pitch angle	Pitch angle
RSV4 Roll angle	Roll angle
RSV4 PFANGCOR 1	-
RSV4 PFANGCOR 2	-
V4MP Throttle	Throttle position
RSV4 THRT HAND	Hand throttle position
RSV4 TPS1	Throttle position sensor 1
RSV4 TPS2	Throttle position sensor 2
V4MP Torque end	Torque reduction
V4MP Inj Time	Injection time
RSV4 Odometer	Odometer
RSV4 V BATT	Battery voltage
RSV4 Pit speed	Pit limiter speed
RSV4 ATC	ATC – Aprilia traction control
RSV4 AWC	AWC – Aprilia wheel control
RSV4 ALC	ALC – Aprilia launch control
RSV4 AQS On	AQS on – Aprilia quick shift
RSV4 Pit on	Pit limiter on
RSV4 Pit active	Pit limiter activated
V4MP ATC level	ATC level – Aprilia traction control
V4MP Speed	Speed
V4MP ABS int	ABS intervention

V4MP Slip	Tyre slip
RSV4 Sistfas	-
RSV4 Cntlostsync	Lost syncs counter
Cruise selector	Cruise selector
RSV4 ALC INT	ALC intervention – Aprilia launch control
RSV4 SEL MAP	Map selector
RSV4 WARNING	Warning light
RSV4 Urg serv	Urgent service lamp
RSV4 MIL	Malfunctioning indicator lamp
RSV4 TC INT	Traction control intervention
RSV4 FUEL LOW	Low fuel level
Set confirm	Selection key
RSV4 Tipover	Tip over sensor
TC menu set butt	Set key
RSV4 SIDE STAND	Side stand led
RSV4 ABS	ABS

Please note: throttle position may or may not come across in the CAN data stream due to an update by the manufacturer.
Technical note: not all data channels outlined in the ECU template are validated for each manufacturer model or variant; some of the outlined channels are model and year specific, and therefore may not be applicable.