aimshop
• LAP TIMERS • LOGGERS • CAMERAS • DASHES • SENSORS • AND MORE
SHOP NOW

AiM User Guide

EVO4S, SOLO 2/SOLO 2 DL kit for BMW S1000RR (from 2009)

Release 1.01

KIT

VISIT SUPPORT CENTER | SOFTWARE DOWNLOADS | FIRMWARE UPDATES | PRODUCT DOCUMENTATION

1
Models and years

This manual explains how to connect EVO4S and SOLO 2 DL to the bike engine control unit (ECU) and how to install AiM SOLO 2/SOLO 2 DL on the bike steering plate.

Compatible models are:

- BMW S1000RR 2009 – 2014
- BMW S1000RR from 2015
- BMW S1000RR HP4 2013 – 2014

Warning: for these models/years AiM recommends not to remove the stock dash. Doing so will disable some of the bike functions or safety controls. AiM Tech srl will not be held responsible for any consequences that may result from the replacement of the original instrumentation cluster.

2
Kit content and part numbers

AiM developed a specific installation bracket for SOLO 2/SOLO 2 DL and a connection cable to the ECU for EVO4S/SOLO 2 DL.

2.1
Bracket for SOLO 2/SOLO 2 DL

Part number for **SOLO 2/SOLO 2 DL** installation bracket for **BMW S1000RR** – shown below – is: **X46KSBMWS1.**

Installation kit contains:
1 bracket (**1**)
1 allen screw with rounded head M8x45mm (**2**)
1 toothed washer (**3**)
2 allen screws with flat head M4x10mm (**4**)
1 rubber dowel (**5**)
1 spacer (**6**)

2.2
AiM cable for SOLO 2 DL

Part number for **SOLO 2 DL** connection cable for **BMW S1000RR** – shown below – is: **V02569230**.

Following image shows the cable constructive scheme:

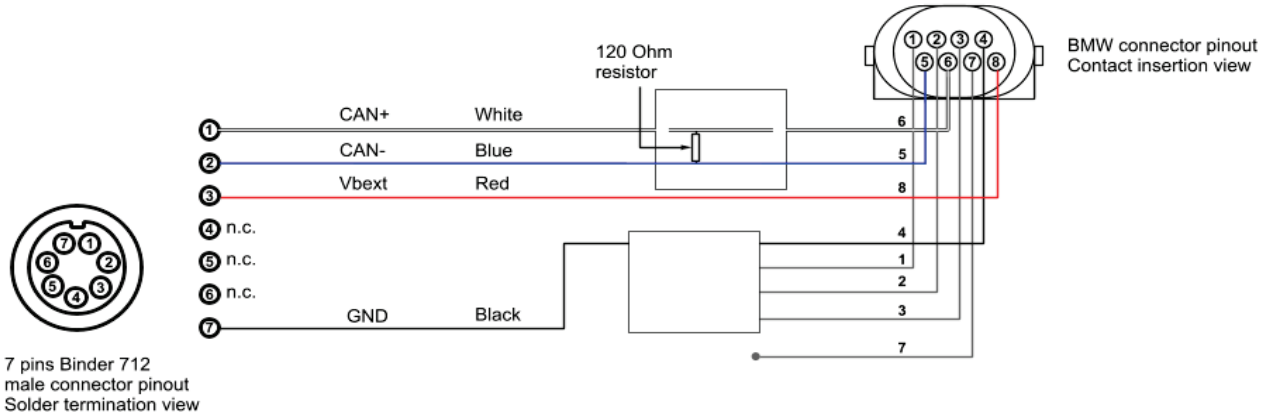

Installation bracket and connection cable for SOLO 2 DL for BMW S1000RR can be bought together. Part number: **V0256923CS**.

2.3
AiM cable for EVO4S

Part number for **EVO4S** connection cable for **BMW S1000RR** – shown below – is: **V02585140.**

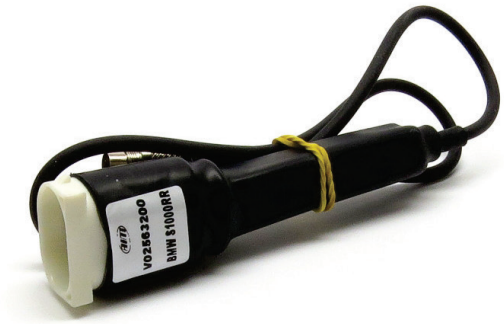

Following image shows the cable constructive scheme:

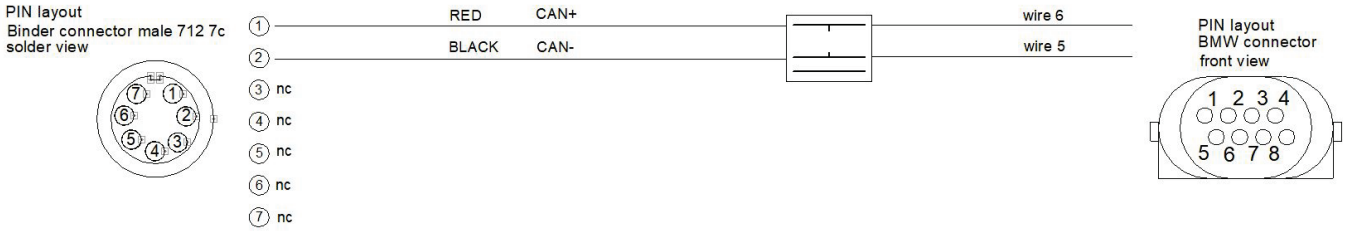

3
EVO4S/SOLO 2 DL connection

To connect EVO4S/SOLO 2 DL to the BMW S1000RR ECU use the connector placed under the bike tail and shown here below:

The image on the right shows the connector in detail.

4
Configuration with Race Studio 3

Before connecting EVO4S/SOLO 2 DL to the bike ECU, set all functions using the AiM software Race Studio 3. The parameters to set in the AiM device configuration section are ("ECU Stream" tab):

ECU Manufacturer: "BMW"
ECU Model:

- "BIKE_S1000RR" for BMW S1000RR 2009 - 2014 and BMW S1000RR HP4 2013 - 2014
- "BIKE_S1000RR_2015" for BMW S1000RR from 2015

After this first selection, enable/disable the 120Ohm resistor and the "Silent" mode on CAN Bus as follows, according to the used device:

EVO4S

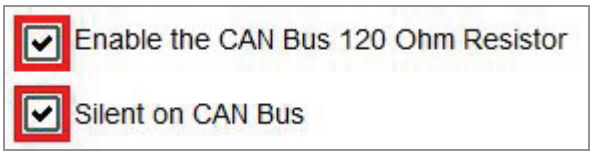

SOLO 2 DL

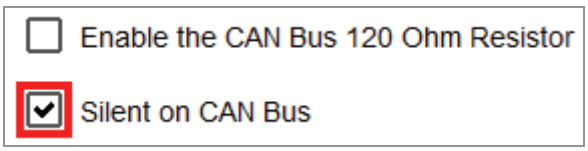

5
BMW protocols

Available channels change according to the selected protocol.

5.1
"BMW - BIKE_S1000RR" protocol

Received channels by EVO4S/SOLO 2 DL configured with “BMW – BIKE_S1000RR” protocol are:

CHANNEL NAME	FUNCTION
S1 RPM	RPM
S1 THROTTLE	Throttle
S1 GEAR	Gear Sensor
S1 NEUTRAL	Neutral sensor
S1 WATER TEMP	Engine cooling temperature
S1 SEL MAP	Selected map
S1 CHK ENGINE	Engine check
S1 SPEED F	Front wheel speed sensor
S1 HAND THRT	Manual Throttle
S1 SPEED R	Rear wheel speed sensor
S1 INTK AIR T	Intake air temperature
S1 YAW RATE	Yawing rate
S1 ROLL RATE	Rolling rate
S1 ACC LATER	Horizontal Accelerometer
S1 ACC VERTIC	Vertical Accelerometer
S1 TC INTERV	Traction Control Intervention
S1 TC OFF	Traction Control in OFF State (alarm)
S1 CLUTCH SW	Clutch Switch
S1 SIDE STAND	Side stand switch

S1 BRK FR SW	Front Brake switch
S1 BRK RR SW	Rear Brake switch
S1 ACC LONGIT	Longitudinal Accelerometer
S1 OIL PRESS SW	Oil pressure switch
S1 EWS CTRL	Immobilizer Control
S1 BRK FAIL	Brake malfunction (Error)
S1 ABS OFF	ABS in off State (alarm)
S1 MAP MENU	Map selection menu
HP4 TC SEL	Traction control selection
HP4 LAUNCH	HP4 Launch control switch
HP4 POT R	HP4 Rear potentiometer
HP4 POT F	HP4 Front potentiometer
HP4 BANKING	HP4 Banking angle
HP4 R SPEED	HP4 Rear wheel Speed
HP4 BIKE SPD	HP4 Bike speed
HP4 F SPEED	HP4 Front wheel speed
HP4 ACC LON	HP4 Longitudinal acceleration

Technical note: not all data channels outlined in the ECU template are validated for each manufacturer model or variant; some of the outlined channels are model and year specific, and therefore may not be applicable; channels labelled “HP4” are only available on **BMW S1000RR HP4 2013-2014** bikes.

5.2
"BMW - BIKE_S1000RR_2015" protocol

Received channels by EVO4S/SOLO 2 DL configured with “BMW – BIKE_S1000RR_2015” protocol are:

CHANNEL NAME	FUNCTION
RPM	RPM
Gear	Gear
SpeedF	Front wheel speed
SpeedR	Rear wheel speed
LongAcc	Longitudinal accelerometer
LatAcc	Lateral accelerometer
VertAcc	Vertical accelerometer
RollRate	Roll rate
YawRate	Yaw rate
WaterTemp	Water temperature
IntakeAirTemp	Intake air temperature
BrakePressF	Front brake pressure
BrakePressR	Rear brake pressure
Banking	Banking angle
TPS	Throttle position sensor
HandTPS	Handgrip throttle position sensor
MomTotRedu	Total torque reduction
ASCTrqReduct	Torque reduction by Automatic Stability Control
ASCTyreGrip	Tyre grip by Automatic Stability Control
WheelMomAct	Actual wheel torque
LaunchCtrl	Launch control
TC Sel	Traction control level selection
ABSActive	ABS active status
LiftOff	Anti-lift control

DamperFmm	Front dampers travel (mm)
DamperRmm	Rear dampers travel in (mm)
InjFuelmL	Fuel injection (millilitres)
OilLevelLow	Low oil level switch (alarm)
ASCOn	Automatic Stability Control ON status
MIL	Malfunctioning indicator lamp (alarm)
RRebound Set	Rear dampers rebound set
FRebound Set	Front dampers rebound set
RBump Set	Rear dampers bump set
FBump Set	Front dampers bump set

Technical note: note all data channels outlined in the ECU template are validated for each manufacturer model or variant; some of the outlined channels are model and year specific, and therefore may not be applicable.