AiM K8 Open Keypad

CAN-BUS keypad Open version

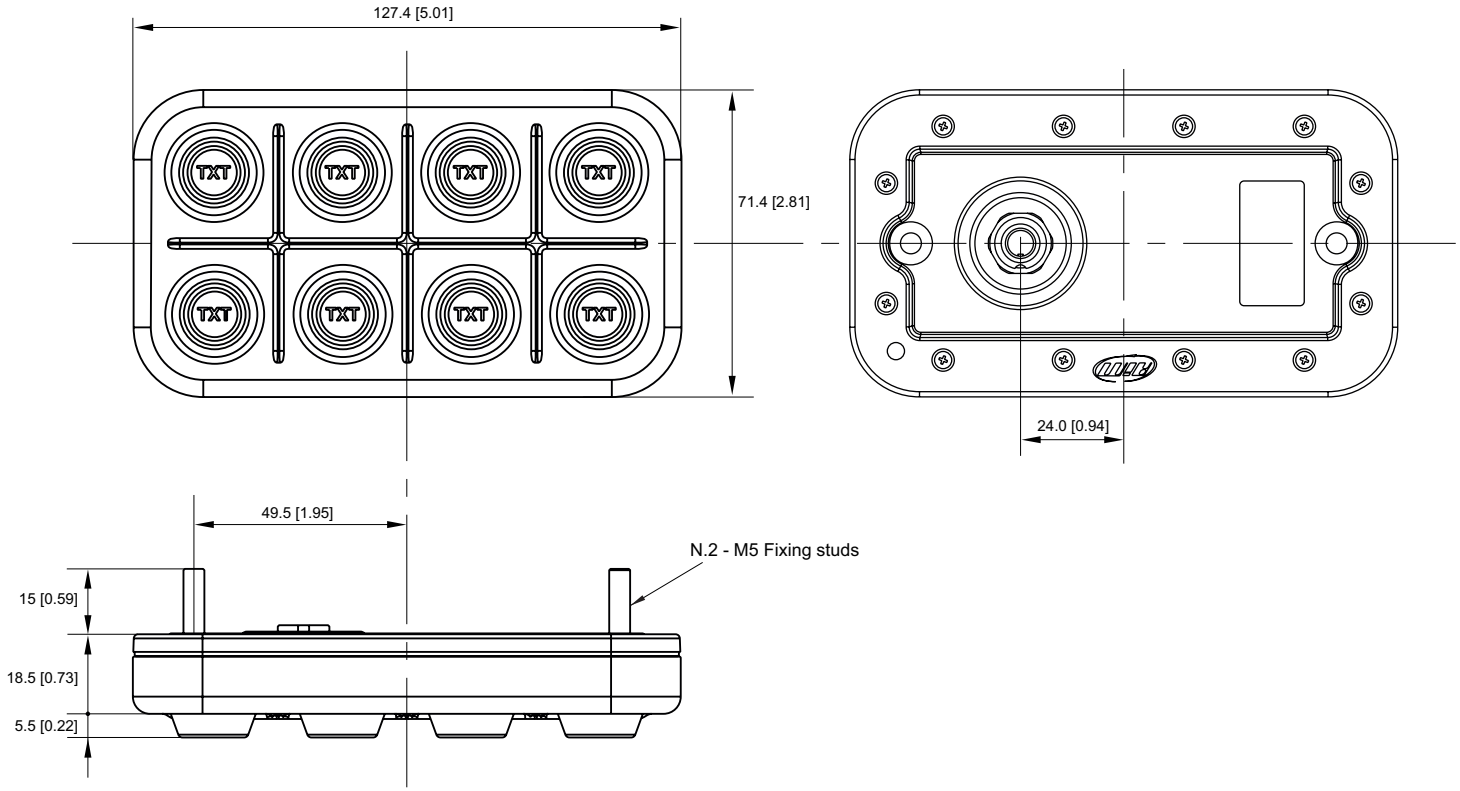

Dimensions in mm [inches]

Technical specifications

Keys	8 programmable keys (momentary, toggle, multistatus)
Backlight buttons	RGB with dimming option
Connection	USB CAN Binder 7 pins
Voltage	9÷15 V
Material	Rubber silicon and PA6 GS30%
Dimensions	127.4 x 71.4 x 24 mm
Weight	150 g
Waterproof	IP67

Pinout

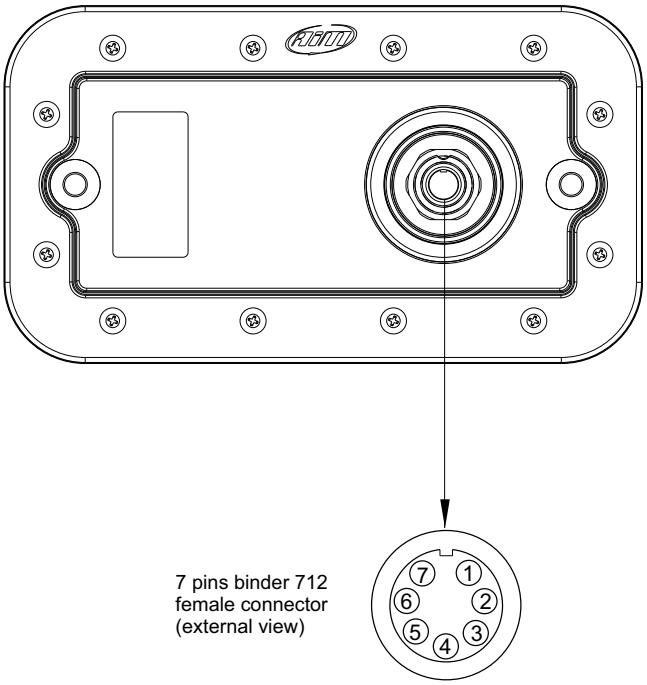

CAN BUS CABLE	
1	USB D+
2	USB D-
3	CAN L
4	CAN H
5	GND
6	+5V USB
7	+ Vb

Connections

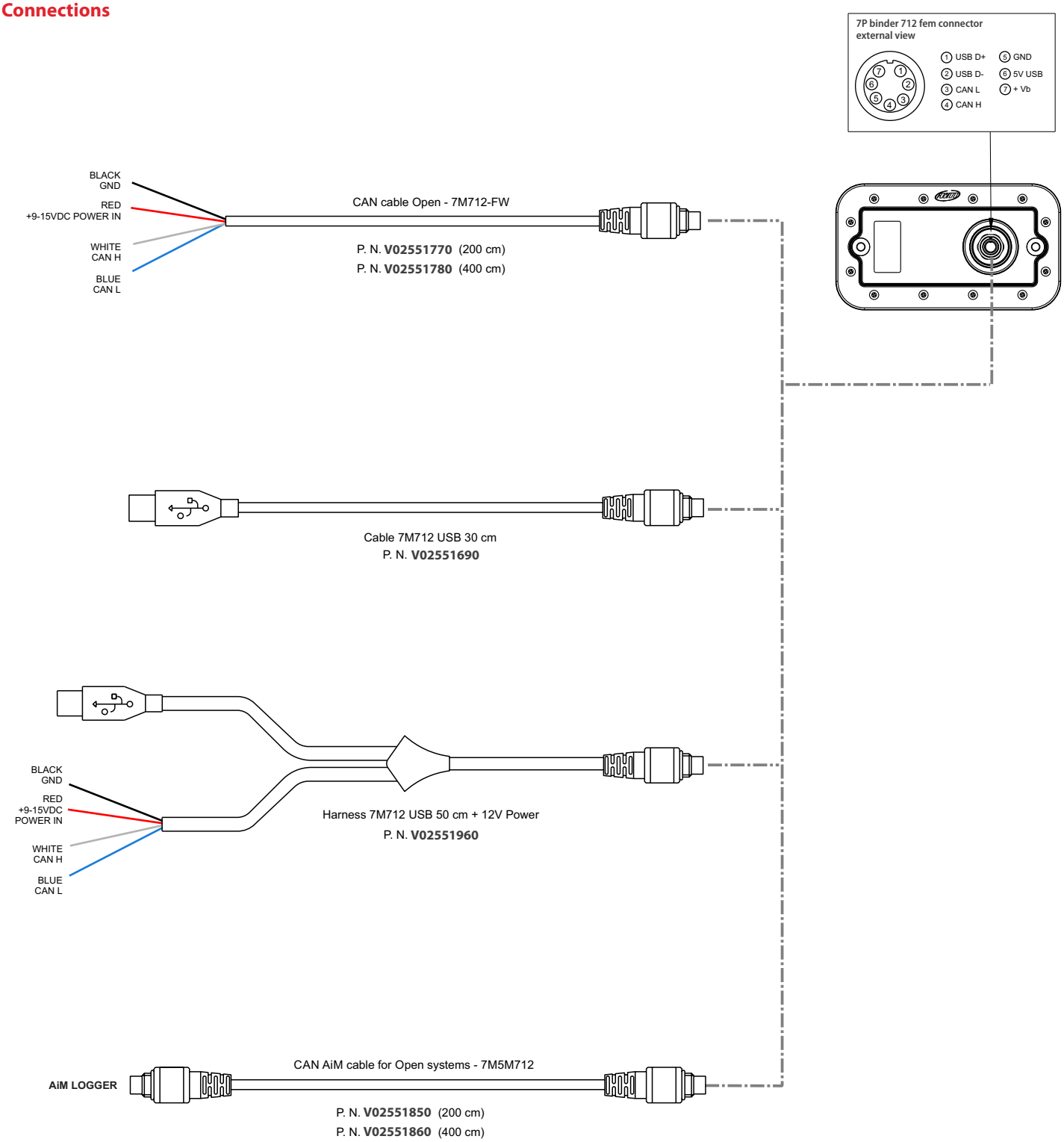

Part numbers

X08KPK8O	Keypad K8 Open without cables
X08KPK8OC200	Keypad K8 Open + CAN cable Open - 7M712-FW 200 cm
X08KPK8OC400	Keypad K8 Open + CAN cable Open - 7M712-FW 400 cm
X08KPK8KICONS	Icons kit (72 pieces)
PART NUMBERS HERE	Single icons (chosen by the user)
V02551770	CAN cable Open - 7M712-FW 200 cm
V02551780	CAN cable Open - 7M712-FW 400 cm
V02551690	Cable 7M712 USB 30 cm
V02551960	Harness 7M712 USB 50 cm + 12V Power
V02551850	CAN AiM cable for Open systems - 7M5M712 200 cm
V02551860	CAN AiM cable for Open systems - 7M5M712 400 cm